Exam Winter Semester 2022

Student Group

First Name	Surname	Matrikel Nr.

Table of Contents

Exercise E1 Resistance of a Wire by Resistivity (written test, approx. 6 % of a 60-minute written test, WS2022) 3
Exercise E1 Resistance of a Wire by Resistivity (written test, approx. 6 % of a 60-minute written test, WS2022) 3
Exercise E1 Temperature-dependent Resistance (written test, approx. 6 % of a 60-minute written test, WS2022) 3
Exercise E2 Temperature-dependent Resistance (written test, approx. 6 % of a 60-minute written test, WS2022) 4
Exercise E1 Pure Resistor Network Simplification (written test, approx. 13 % of a 60-minute written test, WS2022) 5
Exercise E3 Pure Resistor Network Simplification (written test, approx. 13 % of a 60-minute written test, WS2022) 6
Exercise E1 Equivalent linear Source (written test, approx. 14 % of a 60-minute written test, WS2022) 8
Exercise E4 Equivalent linear Source (written test, approx. 14 % of a 60-minute written test, WS2022) 12
Exercise E1 Charging Capacitors (written test, approx. 16 % of a 60-minute written test, WS2022) 16
Exercise E5 Charging Capacitors (written test, approx. 16 % of a 60-minute written test, WS2022) 17
Exercise E1 Analyzing complex Impedances (written test, approx. 14 % of a 60-minute written test, WS2022) 19
Exercise E6 Analyzing complex Impedances (written test, approx. 14 % of a 60-minute written test, WS2022) 19
Exercise E1 Impedances at different Frequencies (written test, approx. 18 % of a 60-minute written test, WS2022) 20
Exercise E7 Impedances at different Frequencies (written test, approx. 18 % of a 60-minute written test, WS2022) 20
Exercise E1 Complex Impedance Circuit (written test, approx. 15 % of a 60-minute written

test, WS2022) 21
Exercise E8 Complex Impedance Circuit (written test, approx. 15 % of a 60-minute written test, WS2022) 24

Exercise E1 Resistance of a Wire by Resistivity
(written test, approx. 6 % of a 60-minute written test, WS2022)

A heating element made of Nichrome wire with a round cross-section of $1.80 ~\rm{mm}$ in diameter and a power dissipation (= heat flow) of $P=40 ~\rm{W}$ is necessary.
Nichrome is a common Nickel-Chrome alloy for heating elements.
The Nichrome wire has a resistivity of $1.10\cdot 10^{-6} ~\Omega \rm{m}$.
The heating element is $3 ~\rm{m}$ long and has a diameter of $3.57 ~\rm{mm}$.

1. Calculate the current I needed to operate the wire with a 230 ~\rm{V}$ electric outlet.
2. Calculate the resistance R of the heating element.

Solution

$$\begin{align*} P = U \cdot I = R \cdot I^2 \quad \rightarrow \quad I= \sqrt{\frac{P}{R}} = \sqrt{\frac{40 ~\rm{W}}{0.33 ~\Omega}} \end{align*}$$

$$\begin{align*} R &= \rho \cdot \frac{l}{A} && | \text{with } A = r^2 \cdot \pi = \frac{1}{4} d^2 \cdot \pi \\ R &= \rho \cdot \frac{4 \cdot l}{d^2 \cdot \pi} && \\ R &= 1.10\cdot 10^{-6} ~\Omega \rm{m} \cdot \frac{4 \cdot 3~\rm{m}}{(3.57\cdot 10^{-3}~\rm{m})^2 \cdot \pi} && \\ \end{align*}$$

Result

Exercise E1 Resistance of a Wire by Resistivity
(written test, approx. 6 % of a 60-minute written test, WS2022)

A heating element made of Nichrome wire with a round cross-section of $1.80 ~\rm{mm}$ in diameter and a power dissipation (= heat flow) of $P=40 ~\rm{W}$ is necessary.
Nichrome is a common Nickel-Chrome alloy for heating elements.
The Nichrome wire has a resistivity of $1.10\cdot 10^{-6} ~\Omega \rm{m}$.
The heating element is $3 ~\rm{m}$ long and has a diameter of $3.57 ~\rm{mm}$.

1. Calculate the current I needed to operate the wire with a 230 ~\rm{V}$ electric outlet.
2. Calculate the resistance R of the heating element.

Solution

$$\begin{align*} P = U \cdot I = R \cdot I^2 \quad \rightarrow \quad I= \sqrt{\frac{P}{R}} = \sqrt{\frac{40 ~\rm{W}}{0.33 ~\Omega}} \end{align*}$$

$$\begin{align*} R &= \rho \cdot \frac{l}{A} && | \text{with } A = r^2 \cdot \pi = \frac{1}{4} d^2 \cdot \pi \\ R &= \rho \cdot \frac{4 \cdot l}{d^2 \cdot \pi} && \\ R &= 1.10\cdot 10^{-6} ~\Omega \rm{m} \cdot \frac{4 \cdot 3~\rm{m}}{(3.57\cdot 10^{-3}~\rm{m})^2 \cdot \pi} && \\ \end{align*}$$

Result

Exercise E1 Temperature-dependent Resistance

(written test, approx. 6 % of a 60-minute written test, WS2022)

2. Additionally, explain 2 different ways to increase the power of the thermistor.
3. Calculate the resistance of the thermistor at $40 ~°\rm{C}$.

Result

Solution

Result

Solution

Exercise E2 Temperature-dependent Resistance
(written test, approx. 6 % of a 60-minute written test, WS2022)

2. Additionally, explain 2 different ways to increase the power of the thermistor.
3. Calculate the resistance of the thermistor at $40 ~°\rm{C}$.

Result

Solution

Result

Solution

Exercise E1 Pure Resistor Network Simplification
(written test, approx. 13 % of a 60-minute written test, WS2022)

The switch shall now be closed. Calculate the equivalent resistance $R_{\rm eq}$ between $\rm A$ and $\rm B$.

Result

$$R_{\rm eq} = 132.8 ~\Omega$$

Solution

\begin{align*} R_{\rm eq} &= 132.8 ~\Omega \\ \end{align*}

Now a wye-delta transformation is necessary.

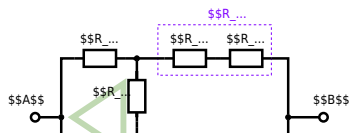

Since $R_2=R_3$ and based on the equations for the transformation, the transformed R_Y is given as: \begin{align*} R_{Y} &= {{R_2 \cdot R_2}\over{R_2 + R_2 + R_2}} \\ &= {{(100 ~\Omega)^2}\over{3 \cdot 100 ~\Omega}} \\ &= {{1}\over{3}} \cdot 100 ~\Omega = 33.33 ~\Omega \end{align*}

The equivalent resistor is given by a parallel configuration of resistors in series: \begin{align*} R_{\rm eq} &= R_Y + (R_Y + R_1 + R_1)||(R_Y + R_2)\\ R_{\rm eq} &= 33.33 ~\Omega + (33.33 ~\Omega + 400 ~\Omega)||(33.33 ~\Omega + 100 ~\Omega)\\ \end{align*}

... The switch shall now be open. Calculate the equivalent resistance $R_{\rm eq}$ between $\rm A$ and $\rm B$.

Solution

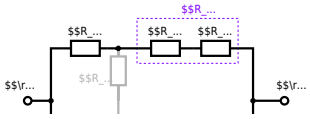

The equivalent resistor is given by a parallel configuration of resistors in series:
\begin{align*} R_{\rm eq} &= (R_2 + R_1 + R_1)||(R_2 + R_2)\\ R_{\rm eq} &= (100 ~\Omega + 200 ~\Omega + 200 ~\Omega)&&||(100 ~\Omega + 100 ~\Omega) &&\\ R_{\rm eq} &= (500 ~\Omega)&&||(200 ~\Omega)&&\\ R_{\rm eq} &= {{500 ~\Omega \cdot 200 ~\Omega }\over{500 ~\Omega + 200 ~\Omega}}&&\\ \end{align*}

Exercise E3 Pure Resistor Network Simplification
(written test, approx. 13 % of a 60-minute written test, WS2022)

The following circuit with $R_1=200 ~\Omega$, $R_2=R_3=100 ~\Omega$ and $R_4=50 ~\Omega$ is given.

The switch shall be closed, equivalent resistance between $\rm A$ and $\rm B$.

Result

Solution

\begin{align*} R_{\rm eq} &= 133.8 ~\Omega \\ \end{align*}

Now a wye-delta transformation is necessary.

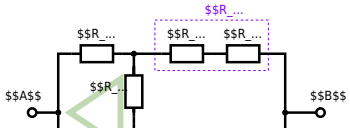

Since $R_2=R_3$ and based on the equations for the transformation, the transformed R_Y is given as: \begin{align*} R_{Y} &= {{R_2 \cdot R_2}\over{R_2 + R_2 + R_2}} \\ &= {{(100 ~\Omega)^2}\over{3 \cdot 100 ~\Omega}} \\ &= {{1}\over{3}} \cdot 100 ~\Omega = 33.33 ~\Omega \end{align*}

The equivalent resistor is given by a parallel configuration of resistors in series: \begin{align*} R_{\rm eq} &= R_Y + (R_Y + R_1 + R_1)||(R_Y + R_2)\\ R_{\rm eq} &= 33.33 ~\Omega + (33.33 ~\Omega + 400 ~\Omega)||(33.33 ~\Omega + 100 ~\Omega)\\ \end{align*}

1. The switch shall now be open. Calculate the equivalent resistance $R_{\rm eq}$ between $\rm A$ and $\rm B$.

Solution

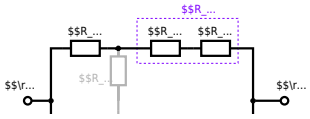

The equivalent resistor is given by a parallel configuration of resistors in series:
\begin{align*} R_{\rm eq} &= (R_2 + R_1 + R_1)||(R_2 + R_2)\\ R_{\rm eq} &= (100 ~\Omega + 200 ~\Omega + 200 ~\Omega)&&||(100 ~\Omega + 100 ~\Omega) &&\\ R_{\rm eq} &= (500 ~\Omega)&&||(200 ~\Omega)&&\\ R_{\rm eq} &= {{500 ~\Omega \cdot 200 ~\Omega }\over{500 ~\Omega + 200 ~\Omega}}&&\\ \end{align*}

Exercise E1 Equivalent linear Source
(written test, approx. 14 % of a 60-minute written test, WS2022)

The circuit in the following has to be simplified.
Result

\begin{align*} U_{\rm s} &= U_{\rm AB} &&= 4.5 ~\rm{V}\\ R_{\rm i} &= R_{\rm AB} &&= 6 ~\Omega \end{align*}

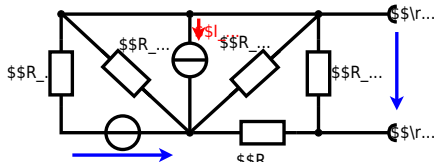

Calculated the internal resistance $R_\rm i$ and the source voltage $U_\rm s$ of an equivalent linear voltage source on the connectors $\rm A$ and $\rm B$. \begin{align*} R_1=5.0 ~\Omega, && U_2=6.0 ~\rm{V}, && R_3= 10 ~\Omega, \\ I_4=4.2 ~\rm{A}, && R_5=10 ~\Omega , && R_6=7.5 ~\Omega, \\ R_7=15 ~\Omega && && \end{align*} Use equivalent sources in order to simplify the circuit!

Solution

The best thing is to re-think the wiring like rubber bands and adjust them:

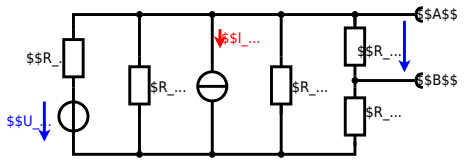

The linear voltage source of U_2 and R_1 can be transformed into a current source $I_2={{U_2}\over{R_1}}$ and R_1:

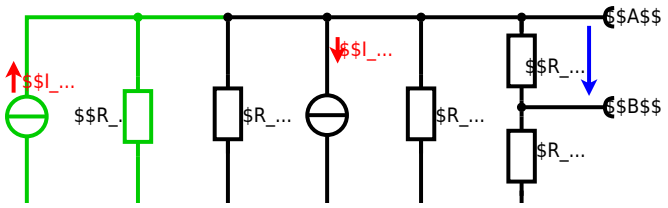

Now a lot of them can be combined. The resistors R_1, R_3, R_5 are in parallel, like also I_2 and I_4: \begin{align*} R_{135} &= R_1||R_3||R_5\\ I_{24} &= I_2 - I_4 = {{U_2}\over{R_1}} - I_4 \end{align*} The resulting circuit can again be transformed:

Here, the U_{24} is calculated by I_{24} as the following: \begin{align*} U_{24}

&= R_{135} \cdot I_{24} \\ &= ({{U_2}\over{R_1}} - I_4) \cdot R_1||R_3||R_5 \end{align*}

On the right side of the last circuit, there is a voltage divider given by R_{135}, R_6, and R_7.
Therefore the voltage between A and B is given as: \begin{align*} U_{\rm AB} &= U_{24} \cdot {{R_7}\over{R_6 + R_7 + R_1||R_3||R_5}} \\ &= ({{U_2}\over{R_1}} - I_4) \cdot {{R_7 \cdot R_1||R_3||R_5}\over{R_6 + R_7 + R_1||R_3||R_5}} \\ \end{align*}

For the internal resistance R_i the ideal voltage source is substituted by its resistance ($=0\Omega$, so a short-circuit): \begin{align*} R_{\rm AB} &= R_7 || (R_6 + R_1||R_3||R_5) \\ \end{align*}

with $R_1||R_3||R_5 = 5 ~\Omega || 10 ~\Omega || 10 ~\Omega = 5 ~\Omega || 5 ~\Omega = 2.5 ~\Omega$:

\begin{align*} U_{\rm AB} &= ({{6.0 ~\rm{V}}\over{5.0 ~\Omega}} - 4.2 ~\Omega) \cdot {{15 ~\Omega \cdot 2.5 ~\Omega}\over{7.5 ~\Omega + 15 ~\Omega + 2.5 ~\Omega}} \\ R_{\rm AB} &= 15 ~\Omega|| (7.5 ~\Omega + 2.5 ~\Omega) \\ \end{align*}

Exercise E4 Equivalent linear Source
(written test, approx. 14 % of a 60-minute written test, WS2022)

The circuit in the following has to be simplified.
Result

\begin{align*} U_{\rm s} &= U_{\rm AB} &&= 4.5 ~\rm{V}\\ R_{\rm i} &= R_{\rm AB} &&= 6 ~\Omega \end{align*}

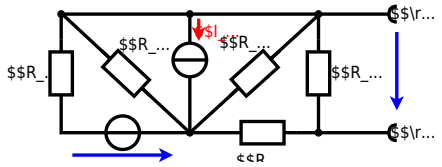

Calculated the internal resistance $R_\rm i$ and the source voltage $U_\rm s$ of an equivalent linear voltage source on the connectors $\rm A$ and $\rm B$. \begin{align*} R_1=5.0 ~\Omega, && U_2=6.0 ~\rm{V}, && R_3= 10 ~\Omega, \\ I_4=4.2 ~\rm{A}, && R_5=10 ~\Omega , && R_6=7.5 ~\Omega, \\ R_7=15 ~\Omega && && \end{align*} Use equivalent sources in order to simplify the circuit!

Solution

The best thing is to re-think the wiring like rubber bands and adjust them:

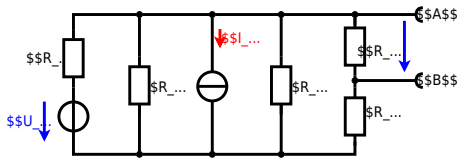

The linear voltage source of U_2 and R_1 can be transformed into a current source $I_2={{U_2}\over{R_1}}$ and R_1:

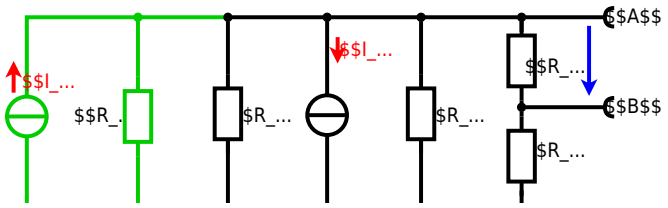

Now a lot of them can be combined. The resistors R_1, R_3, R_5 are in parallel, like also I_2 and I_4: \begin{align*} R_{135} &= R_1||R_3||R_5\\ I_{24} &= I_2 - I_4 = {{U_2}\over{R_1}} - I_4 \end{align*} The resulting circuit can again be transformed:

Here, the U_{24} is calculated by I_{24} as the following: \begin{align*} U_{24}

&= R_{135} \cdot I_{24} \\ &= ({{U_2}\over{R_1}} - I_4) \cdot R_1||R_3||R_5 \end{align*}

On the right side of the last circuit, there is a voltage divider given by R_{135}, R_6, and R_7.
Therefore the voltage between A and B is given as: \begin{align*} U_{\rm AB} &= U_{24} \cdot {{R_7}\over{R_6 + R_7 + R_1||R_3||R_5}} \\ &= ({{U_2}\over{R_1}} - I_4) \cdot {{R_7 \cdot R_1||R_3||R_5}\over{R_6 + R_7 + R_1||R_3||R_5}} \\ \end{align*}

For the internal resistance R_i the ideal voltage source is substituted by its resistance ($=0\Omega$, so a short-circuit): \begin{align*} R_{\rm AB} &= R_7 || (R_6 + R_1||R_3||R_5) \\ \end{align*}

with $R_1||R_3||R_5 = 5 ~\Omega || 10 ~\Omega || 10 ~\Omega = 5 ~\Omega || 5 ~\Omega = 2.5 ~\Omega$:

\begin{align*} U_{\rm AB} &= ({{6.0 ~\rm{V}}\over{5.0 ~\Omega}} - 4.2 ~\Omega) \cdot {{15 ~\Omega \cdot 2.5 ~\Omega}\over{7.5 ~\Omega + 15 ~\Omega + 2.5 ~\Omega}} \\ R_{\rm AB} &= 15 ~\Omega|| (7.5 ~\Omega + 2.5 ~\Omega) \\ \end{align*}

Exercise E1 Charging Capacitors
(written test, approx. 16 % of a 60-minute written test, WS2022)

[illegible] S_1 [illegible] S_2 [illegible] R_2 [illegible] open. The voltage across the capacitor is again $0 ~\rm{V}$ at the moment $t_0=0 ~\rm{s}$ when the switch S_1 is closed. Calculate the voltage $u_c (t_2)$ across the capacitor at $t_2=1 ~\rm{ms}$ after closing the switch.

Hint: To solve this, first create an equivalent linear voltage source from U, R_1, and $R_{\rm B}$.

Solution

\begin{align*} \Delta W_R &= \int_{t_1}^{t_2} {{U_C^2}\over{R_2}} dt \\ &= {{(12 ~\rm{V})^2}\over{100 ~\rm{\Omega}}} \cdot 1 ~\rm{ms} \\ &= 1.44 ~\rm{mJ} \end{align*}

Solution

\begin{align*} \Delta W_R &= \int_{t_1}^{t_2} {{U_C^2}\over{R_2}} dt \\ &= {{(12 ~\rm{V})^2}\over{100 ~\rm{\Omega}}} \cdot 1 ~\rm{ms} \\ &= 1.44 ~\rm{mJ} \end{align*}

Using the ideal voltage source U_1 provides the voltage of $U_1 = 12 ~\rm{V}$ independent of the current I.

On an alternative view, one can try to create an equivalent linear voltage source again. Then, the internal resistance is given by substituting the ideal voltage source is again short-circuiting R_2.

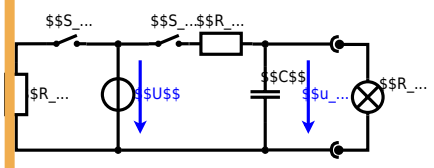

The circuit contains a voltage source $U=12 ~\rm{V}$, a switch S_1, a resistor of $R_1=20 ~\Omega$ and a capacitor of $C=100 ~\rm{µF}$.
The switch S_2 to an additional consumer R_2 will be considered to be open for the first task. At the moment $t_0=0 ~\rm{s}$ the switch S_1 is closed, the voltage across the capacitor is $u_c (t_0)=0 ~\rm{V}$.

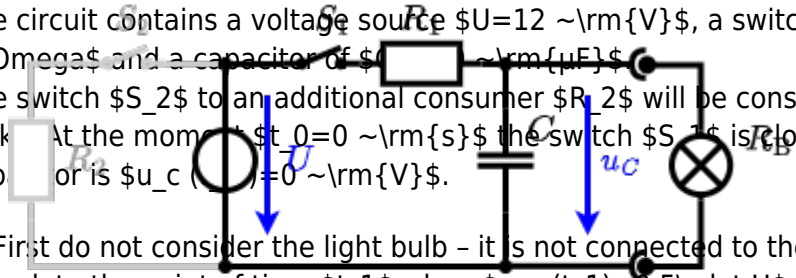

1. First do not consider the light bulb – it is not connected to the RC circuit.
Calculate the point of time t_1 when $u_c (t_1)=0.5\cdot U$.

Solution

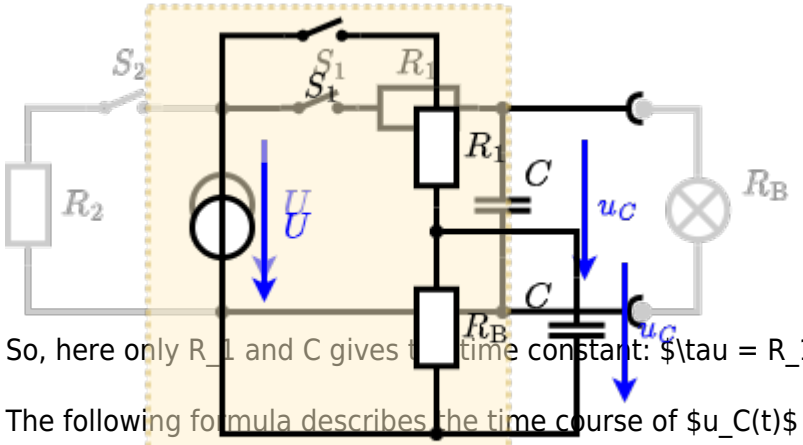

So, here only R_1 and C gives the time constant: $\tau = R_1 \cdot C$

The following formula describes the time course of $u_C(t)$ which has to be $u_c (t_1)=0.5\cdot U$: \begin{align*} u_c (t) = U \cdot (1- e^{t/\tau}) = 0.5\cdot U \end{align*} It has to be rearranged to t \begin{align*} (1- e^{t/\tau}) &= 0.5 \\ e^{t/\tau} &= 0.5 \\ t/\tau &= ln(0.5) \\ t &= \tau \cdot ln(0.5) \\ t &= R_1 \cdot C \cdot ln(0.5) \end{align*}

An equivalent linear voltage source can be given with U, R_1, and $R_\rm B$ as seen in yellow.
Therefore, the voltage of the equivalent linear voltage source is: $U_s = U \cdot {{R_\rm B}\over{R_1 + R_\rm B}} = 1/2 \cdot U$ The internal resistance is given by substituting the ideal voltage source with its resistance ($=0 ~\Omega$, short-circuit).
\begin{align*} R_i &= R_1 || R_\rm B \\ &= 10 ~\Omega \end{align*}

\begin{align*} u_c (t_2) &= U_s \cdot (1- e^{t_2/(R_i\cdot C)}) \\ &= {{1}\over{2}} \cdot U \cdot (1- e^{1~\rm{ms}/(10 ~\Omega \cdot 100 ~\rm{µF})}) \end{align*}

Exercise E5 Charging Capacitors
(written test, approx. 16 % of a 60-minute written test, WS2022)

2. Now, the switch S_2 is closed. The voltage across the capacitor is again $0 ~\rm{V}$ at the moment $t_0=0 ~\rm{s}$ when the switch S_1 is closed. Calculate the voltage $u_c (t_2)$ across the capacitor at $t_2=1 ~\rm{ms}$ after closing the switch.

Solution

Hint: To solve this, first create an equivalent linear voltage source from U, R_1, and $R_\rm B$.

\begin{align*} U_s &= 12 ~\rm{V} \cdot {{R_\rm B}\over{R_1 + R_\rm B}} \\ &= 6 ~\rm{V} \end{align*}

Solution

\begin{align*} \Delta W_R &= \int_{t_1}^{t_2} \frac{u_C^2}{R_1} dt \\ &= \frac{1}{R_1} \int_{t_1}^{t_2} u_C^2 dt \\ &= \frac{1}{20 ~\rm{\Omega}} \cdot 100 ~\rm{\mu F} \cdot (12 ~\rm{V})^2 \end{align*}

On an alternative view, one can try to create an equivalent linear voltage source again. Then, the internal resistance is given by substituting the ideal voltage source is again short-circuiting R_2

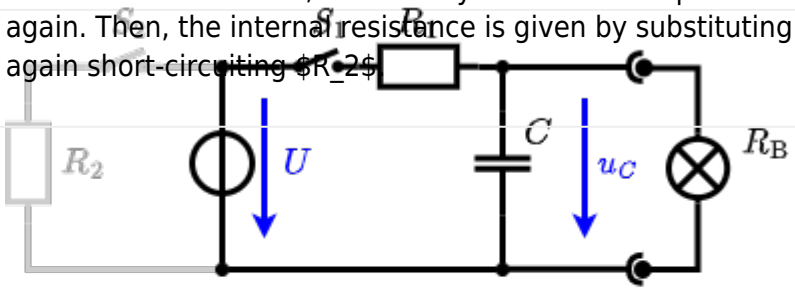

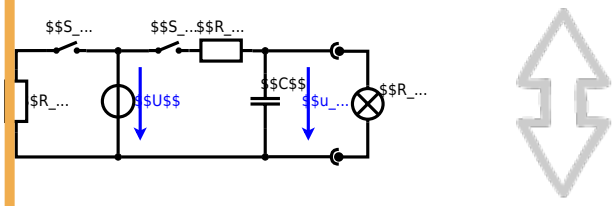

The circuit contains a voltage source $U=12 ~\rm{V}$, a switch S_1, a resistor of $R_1=20 ~\Omega$ and a capacitor of $C=100 ~\rm{µF}$.
The switch S_2 to an additional consumer R_2 will be considered to be open for the first tasks. At the moment $t_0=0 ~\rm{s}$ the switch S_1 is closed, the voltage across the capacitor is $u_c (t_0)=0 ~\rm{V}$.

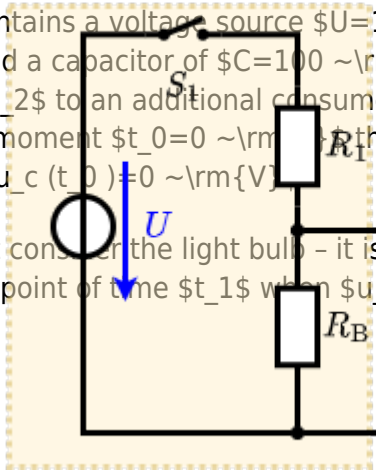

1. First do not consider the light bulb – it is not connected to the RC circuit.
Calculate the point of time t_1 when $u_C(t_1)=0.5\cdot U$.

Solution

An equivalent linear voltage source can be given with U, R_1, and $R_\rm B$ as seen in yellow.
Therefore, the voltage of the equivalent linear voltage source is: $U_s = U \cdot {{R_\rm B}\over{R_1 + R_\rm B}} = 1/2 \cdot U$ The internal resistance is given by substituting the ideal voltage source with its resistance ($=0 ~\Omega$, short-circuit).
\begin{align*} R_i &= R_1 || R_\rm B \\ &= 10 ~\Omega \end{align*}

\begin{align*} u_c (t_2) &= U_s \cdot (1- e^{t_2/(R_i\cdot C)}) \\ &= {{1}\over{2}} \cdot U \cdot (1- e^{1 ~\rm{ms}/(10 ~\Omega \cdot 100 ~\rm{µF})}) \end{align*}
So, here only R_1 and C gives the time constant: $\tau = R_1 \cdot C$

The following formula describes the time course of $u_C(t)$ which has to be $u_c (t_1)=0.5\cdot U$: \begin{align*} u_c (t) = U \cdot (1- e^{t/\tau}) = 0.5\cdot U \end{align*} It has to be rearranged to t \begin{align*} (1- e^{t/\tau}) &= 0.5 \\ e^{t/\tau} &= 0.5 \\ t/\tau &= ln(0.5) \\ t &= \tau \cdot ln(0.5) \\ t &= R_1 \cdot C \cdot ln(0.5) \end{align*}

Exercise E1 Analyzing complex Impedances
(written test, approx. 14 % of a 60-minute written test, WS2022)

2. Calculate the physical values of the two components.

Solution

$$\begin{align*} C &= 103 ~\rm{F} \end{align*}$$

$$\begin{align*} R &= 0.24 ~\Omega \\ \varphi_i &= 87.06^{\circ} \end{align*}$$

Solution

The current and voltage are in phase once there is only a pure ohmic (= pure real) resulting impedance $\underline{Z} = \underline{X}_2$.

Therefore, the component must be a capacitor with the same absolute value of impedance.

$$\begin{aligned} \underline{X}_C &= \underline{X}_L \\ {{1}\over{\omega \cdot C}} &= {{1}\over{\omega \cdot X_L}} \\ C &= {{1}\over{2\pi \cdot 300 ~\rm{Hz} \cdot 4.68 ~\Omega}} \end{aligned}$$

The phase φ_i can be calculated as

$$\begin{aligned} \varphi_i &= \arctan \left({{\Im()}\over{\Re()}} \right) \\ &= \arctan \left({{-4.68 ~\Omega}\over{0.24 ~\Omega}} \right) \end{aligned}$$

Exercise E6 Analyzing complex Impedances
(written test, approx. 14 % of a 60-minute written test, WS2022)

2. Calculate the physical values of the two components.

Solution

$$\begin{aligned} C &= 103 ~\rm{F} \end{aligned}$$

$$\begin{aligned} R &= 0.24 ~\Omega \\ \varphi_i &= 87.06^{\circ} \end{aligned}$$

Solution

The current and voltage are in phase once there is only a pure ohmic (= pure real) resulting impedance $\underline{Z} = \underline{X}_2$.

Therefore, the component must be a capacitor with the same absolute value of impedance.

$$\begin{aligned} \underline{X}_C &= \underline{X}_L \\ {{1}\over{\omega \cdot C}} &= {{1}\over{\omega \cdot X_L}} \\ C &= {{1}\over{2\pi \cdot 300 ~\rm{Hz} \cdot 4.68 ~\Omega}} \end{aligned}$$

The phase φ_i can be calculated as

$$\begin{aligned} \varphi_i &= \arctan \left({{\Im()}\over{\Re()}} \right) \\ &= \arctan \left({{-4.68 ~\Omega}\over{0.24 ~\Omega}} \right) \end{aligned}$$

Transcribed formula: \begin{align*} \underline{U}_{1} &= \underline{I}_{1} \cdot \underline{R}_{1} \\ &= 5 ~\rm V \\ \underline{U}_{2} &= \underline{I}_{2} \cdot \underline{R}_{2} \\ &= 0.24 ~\Omega \cdot 4.68 ~\Omega \cdot {\rm j} \cdot 5 ~\rm V \\ &= 5.50 ~\rm V \end{align*}

Transcribed formula: \begin{align*} \underline{I}_{1} &= \underline{I}_{2} = \underline{I}_{3} = 5 ~\rm A \\ \underline{U}_{3} &= \underline{I}_{3} \cdot \underline{R}_{3} \\ &= 5 ~\rm A \cdot 10 ~\Omega \\ &= 50 ~\rm V \end{align*}

Transcribed formula: \begin{align*} \underline{U}_{1} &= 5 ~\rm V \\ \underline{U}_{2} &= 5.50 ~\rm V \\ \underline{U}_{3} &= 50 ~\rm V \end{align*}

Transcribed formula: \begin{align*} R_2 &= \left| \underline{R}_{2} \right| \\ &= \left| 0.24 ~\Omega + 4.68 ~\Omega \cdot {\rm j} \right| \\ &= 0.24 ~\Omega \cdot \sqrt{ 1 + 19.5 } \\ &= 4.68 ~\Omega \end{align*}

Transcribed formula: \begin{align*} \underline{I}_{2} &= {{\underline{U}_{2}}\over{\underline{R}_{2}}} \\ &= {{5.50 ~\rm V}\over{4.68 ~\Omega \cdot {\rm j}}} \\ &= {{5.50 ~\rm V}\over{4.68 ~\Omega}} \\ &= 1.18 ~\rm A \end{align*}

Transcribed formula: \begin{align*} I_2 &= \left| \underline{I}_{2} \right| \\ &= {{5.50 ~\rm V}\over{\sqrt{ (0.24 ~\Omega)^2 + (4.68 ~\Omega)^2 }}} \end{align*}

With the complex part comes the physical value: \begin{align*} X_L &= \omega L \\ L &= {{X_L}\over{2\pi \cdot f}} \\ &= {{4.68 ~\Omega}\over{2\pi \cdot 300 ~\rm Hz}} \\ &= 2.4 ~\rm H \end{align*}

The phase angle is: \begin{align*} \varphi &= \arctan \left({{-4.68 ~\Omega}\over{0.24 ~\Omega}} \right) \\ \end{align*}

Exercise E1 Impedances at different Frequencies
(written test, approx. 18 % of a 60-minute written test, WS2022)

2. A RC series circuit with $C=34.7 ~\rm nF$ is used in AC voltage source $U_0=21.0 ~\rm V$, with $f=200 ~\rm kHz$, which generates a current $I_2=50 ~\rm mA$.
Result: $R_3=10 ~\Omega$.

1. A series circuit with $L=4.7 ~\rm µH$ is used in AC voltage source $U_0=21.0 ~\rm V$, with $f=450 ~\rm kHz$, which generates a current $I_2=60 ~\rm mA$ through R_3.
A resistor R_1 shall have the same absolute value of the impedance as a capacitor $C_1=40 ~{\rm nF}$ at $f_1=4 ~{\rm MHz}$.

Solution

Solution

Solution

\begin{align*} R_1 &= 1.00 ~\Omega \\ \end{align*}

\begin{align*} R_2 &= 10.0 ~\Omega \\ \end{align*}

A series circuit means that the current is constant on every component.
The equivalent impedance for R and L combined is given by \begin{align*} {{\underline{U}}\over{\underline{I}}} &= \underline{X}_{L2} \\ &= R_2 + \underline{X}_{L2} \\ &= R_2 + {\rm j} \cdot \omega L \end{align*} Since ${\rm j} \cdot \omega L$ is perpendicular to R_2 this can be simplified to: \begin{align*} \left| {{\underline{U}}\over{\underline{I}}} \right|^2 &= |R_2|^2 + |\underline{X}_{L2}|^2 \\ \left({{\underline{U}}\over{\underline{I}}} \right)^2 &= {R_2}^2 + {X_{L2}}^2 \\ \end{align*}
Therefore, the resulting current of the parallel circuit is given as: \begin{align*} \underline{I}_{3} &= \underline{I}_{3R} + \underline{I}_{3C} \\ I_3 &= \sqrt{ |\underline{I}_{3}|^2 - |\underline{I}_{3R}|^2 } \\ &= \sqrt{ \left({{U_0}\over{60~\rm mA}} \right)^2 - (2\pi \cdot 450~{\rm kHz} \cdot 4.7 ~ {\rm µH})^2 } \\ \end{align*}
Back to the first formula: \begin{align*} R_3 \cdot {I}_{3R} &= {X}_{3C} \cdot {I}_{3C} \\ R_3 &= {X}_{3C} \cdot {{{I}_{3C}}\over{{I}_{3R}}} \\ &= {{1}\over{2\pi \cdot f \cdot C_3}} \cdot {{\sqrt{|{I}_{3}|^2 - |{I}_{3R}|^2}}\over{{I}_{3R}}} \\ \end{align*}

Parallel circuit means that the voltage is the same on R_3 and C_2.
Since ${\rm j} \cdot \omega L$ is perpendicular to R_2 it gets clear that $\underline{I}_{3R}$ is perpendicular to $\underline{I}_{3C}$ (It has to, since R_3 is perpendicular to ${\rm j} \cdot {X}_{3C}$ too).
This can be easily calculated: \begin{align*} \left| \underline{I}_{3} \right|^2 &= \left| \underline{I}_{3C} \right|^2 + \left| \underline{I}_{3R} \right|^2 \\ \end{align*}

Exercise E7 Impedances at different Frequencies
(written test, approx. 18 % of a 60-minute written test, WS2022)

Result: The resistor values are $R_1 = 1.00 ~\Omega$, $R_2 = 7.0 ~\Omega$, $R_3 = 10.0 ~\Omega$.

1. A resistor R_1 shall have the same absolute value of the impedance as a capacitor $C_1=40 ~{\rm nF}$ at $f_1=4 ~{\rm MHz}$.

Solution

\begin{align*} R_1 &= 1.00 ~\Omega \\ \end{align*}

Solution

\begin{align*} R_2 &= 7.0 ~\Omega \\ \end{align*}

Solution

A series circuit means that the current is constant on every component.

The equivalent impedance for R and L combined is given by \begin{align*} {{\underline{U}}\over{\underline{I}}} &= R_2 + \underline{X}_{L2} \\ &= R_2 + j \cdot \omega L \end{align*} Since $\underline{X}_{L2}$ is perpendicular to R_2 this can be simplified to: \begin{align*} \left| {{\underline{U}}\over{\underline{I}}} \right|^2 &= |R_2|^2 + |\underline{X}_{L2}|^2 \\ \left({{U}\over{I}} \right)^2 &= {R_2}^2 + {X_{L2}}^2 \\ \end{align*}

Therefore, the resulting current of the parallel circuit is given as: \begin{align*} \underline{I}_{3} &= \underline{I}_{3R} + \underline{I}_{3C} \\ |\underline{I}_{3}|^2 &= |\underline{I}_{3R}|^2 + |\underline{I}_{3C}|^2 \\ \left({{I}\over{I}} \right)^2 &= \left({{I_{3R}}\over{I_{3}}} \right)^2 + \left({{I_{3C}}\over{I_{3}}} \right)^2 \\ 1 &= \left({{I_{3R}}\over{60~\rm mA}} \right)^2 - (2\pi \cdot 450~{\rm kHz} \cdot 4.7 ~ {\rm µH})^2 \} \\ \end{align*}

Back to the first formula: \begin{align*} R_3 \cdot {I}_{3R} &= {X}_{3C} \cdot {I}_{3C} \\ R_3 &= {X}_{3C} \cdot {{{I}_{3C}}\over{{I}_{3R}}} \\ &= {{1}\over{2\pi \cdot f \cdot C_3}} \cdot {{\sqrt{|{I}_{3}|^2 - |{I}_{3R}|^2}}\over{{I}_{3R}}} \\ \end{align*}

This can be rearranged to get the R_3 by itself: \begin{align*} R_3 &= {{1}\over{2\pi \cdot f \cdot C_3}} \cdot {{\sqrt{{I}_{3}^2 - {I}_{3R}^2}}\over{I_{3R}}} \\ &= {{1}\over{60~\rm mA}} \cdot \left({{\sqrt{(60~\rm mA)^2 - (2\pi \cdot 450~{\rm kHz} \cdot 4.7 ~ {\rm µH})^2 }}\over{60~\rm mA}} \right)^2 - (2\pi \cdot 450~{\rm kHz} \cdot 4.7 ~ {\rm µH})^2 \} \\ \end{align*}

Back to the first formula: \begin{align*} R_3 \cdot {I}_{3R} &= {X}_{3C} \cdot {I}_{3C} \\ R_3 &= {X}_{3C} \cdot {{{I}_{3C}}\over{{I}_{3R}}} \\ &= {{1}\over{2\pi \cdot f \cdot C_3}} \cdot {{\sqrt{|{I}_{3}|^2 - |{I}_{3R}|^2}}\over{{I}_{3R}}} \\ \end{align*}

Exercise E1 Complex Impedance Circuit
(written test, approx. 15 % of a 60-minute written test, WS2022)

1. Draw the circuit diagram of the given circuit.
2. Label all components, voltages, and currents.
3. Calculate the complex impedance $\underline{Z}$ using the complex voltage $\underline{U}$ and the complex current $\underline{I}$ by the ohm's law.
4. Choose a appropriate scaling factor and write down the $\underline{Z}$ with the scaling factor and Ω.

Solution

Result

Solution

Result

With $I = {{1}\over{\sqrt{2}}} \cdot \hat{I}$: \begin{align*} I &= {{1}\over{\sqrt{2}}} \cdot {{\hat{U}}\over{Z}} \\ &= {{1}\over{\sqrt{2}}} \cdot {{3.0 ~ {\rm V}}\over{19.28 ~ \Omega}} \\ \end{align*}

This linear source is connected with an inductor of $330 ~ {\rm µH}$ and a capacitor of $0.22 ~ {\rm µF}$, all in series.

$u(t) = 3.0 ~ {\rm V} \cdot \sin(2\pi \cdot 15 ~ {\rm kHz} \cdot t)$ with an internal resistance of $10 ~ \Omega$.

$R = 10 ~ \Omega$, $L = 330 ~ {\rm µH}$, $C = 0.22 ~ {\rm µF}$, $f = 15 ~ {\rm kHz}$, $\hat{U} = 3.0 ~ {\rm V}$, $\hat{I} = 0.31 ~ {\rm A}$, $\underline{Z}_L = j \cdot 31.4 ~ \Omega$, $\underline{Z}_C = -j \cdot 48.2 ~ \Omega$, $\underline{Z} = 19.8 ~ \Omega$

\begin{align*} Z &= {{\hat{U}}\over{\hat{I}}} \\ \hat{I} &= {{\hat{U}}\over{Z}} \\ \end{align*}

\begin{align*} Z_C &= {{1}\over{2\pi \cdot f \cdot C}}\\ &= {{1}\over{2\pi \cdot 15 ~ {\rm kHz} \cdot 0.22 ~ {\rm µF}}}\\ \end{align*}

\begin{align*} Z_L &= 2\pi \cdot f \cdot L \\ &= 2\pi \cdot 15 ~ {\rm kHz} \cdot 0.22 ~ {\rm µF}\\ \end{align*}

\begin{align*} Z_C &= {{1}\over{2\pi \cdot f \cdot C}}\\ &= {{1}\over{2\pi \cdot 15 ~ {\rm kHz} \cdot 330 ~ {\rm µH}}}\\ \end{align*}

\begin{align*} \underline{Z} &= R + \underline{Z}_L + \underline{Z}_C \\ &= R + j \cdot {Z}_L - j \cdot {Z}_C \\ &= R + j \cdot ({Z}_L - {Z}_C) \\ |\underline{Z}| &= \sqrt{R^2 + (\underline{Z}_L - \underline{Z}_C)^2 }\\ \end{align*}

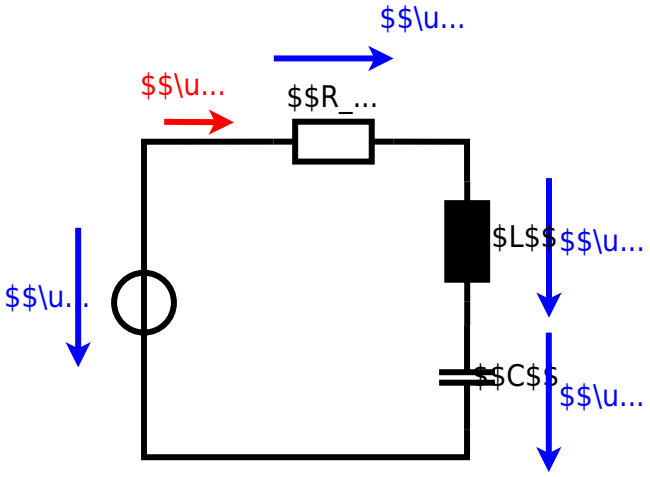
$$\u...
$$\u...
$$R_...
$L$$
$$\u...
$$\u...
$$C$$
$$\u...

Exercise E8 Complex Impedance Circuit
(written test, approx. 15 % of a 60-minute written test, WS2022)

A. Draw the circuit diagram of the given circuit.
B. Label all components, voltages, and currents.
C. Calculate the complex impedance $\underline{Z}_L$, $\underline{Z}_C$, and $\underline{Z}$ and the complex impedance $|\underline{Z}|$ of the voltage source.
D. Calculate the current $\hat{I}$ and the voltage $\hat{U}_L$ and $\hat{U}_C$ with appropriate scaling factors and units.

Given:
The voltage source is $u(t) = 3.0 ~{\rm V} \cdot \sin(2\pi \cdot 15 ~{\rm kHz} \cdot t)$ with an internal resistance of $10 ~\Omega$.
This linear source is connected with an inductor of $330 ~ {\rm µH}$ and a capacitor of $0.22 ~{\rm µF}$, all in series.

Solution

Result

.. Draw the circuit diagram of the given circuit.

Solution

Result

Result

With $k = {{1}\over{\sqrt{2}}}\cdot \hat{I}$:

$$\begin{align*} Z &= 107.31 ~{\rm \Omega} \cdot e^{j \cdot 6.5} \\ Z &= 48.2 ~\Omega \\ Z &= 19.8 ~\Omega \end{align*}$$

$$\begin{align*} Z &= {{\hat{U}}\over{\hat{I}}} \\ \hat{I} &= {{\hat{U}}\over{Z}} \\ \end{align*}$$

$$\begin{align*} Z_C &= {{1}\over{2\pi \cdot f \cdot C}}\\ &= {{1}\over{2\pi \cdot 15 ~{\rm kHz} \cdot 0.22 ~{\rm µF}}}\\ \end{align*}$$

$$\begin{align*} Z_L &= 2\pi \cdot f \cdot L\\ &= 2\pi \cdot 15 ~{\rm kHz} \cdot 0.22 ~{\rm µF}\\ \end{align*}$$

$$\begin{align*} \hat{I} &= {{1}\over{\sqrt{2}}}\cdot {{\hat{U}}\over{Z}} \\ &= {{1}\over{\sqrt{2}}}\cdot {{3.0 ~{\rm V}}\over{19.28 ~\Omega}}\\ \end{align*}$$

$$\begin{align*} Z_C &= {{1}\over{2\pi \cdot f \cdot C}}\\ &= {{1}\over{2\pi \cdot 15 ~{\rm kHz} \cdot 330 ~{\rm µH}}}\\ \end{align*}$$

$$\begin{align*} \underline{Z} &= R + \underline{Z}_L + \underline{Z}_C \\ &= R + j \cdot {Z}_L - j \cdot {Z}_C \\ &= R + j \cdot ({Z}_L - {Z}_C) \\ |\underline{Z}| &= \sqrt{R^2 + (\underline{Z}_L - \underline{Z}_C)^2 }\\ \end{align*}$$

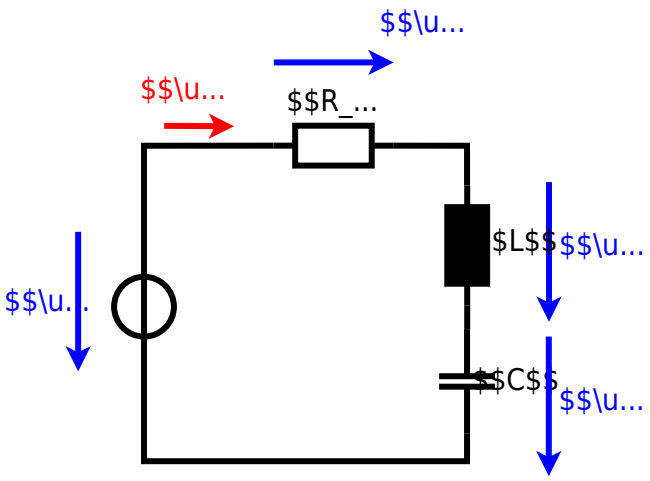
$$\u...
$$\u...
$$R_...
$L$$
$$\u...
$$\u...
$$C$$
$$\u...

From:
https://wiki.mexle.te.hs-heilbronn.de/ - **MEXLE Wiki**

Permanent link:
https://wiki.mexle.te.hs-heilbronn.de/electrical_engineering_1/ws2022_exam?rev=1680343849

Last update: **2023/04/01 12:10**